Morgan

ORW-MG-6.1HS-MR4

WALL MOUNTED EXPOSED SHOWER WITH HAND SHOWER
FLOW RATE: 1.75 GPM
NOTE: SOME BUILDING CODES MAY REQUIRE A REMOTE PRESSURE BALANCE VALVE FOR ANTI-SCALD

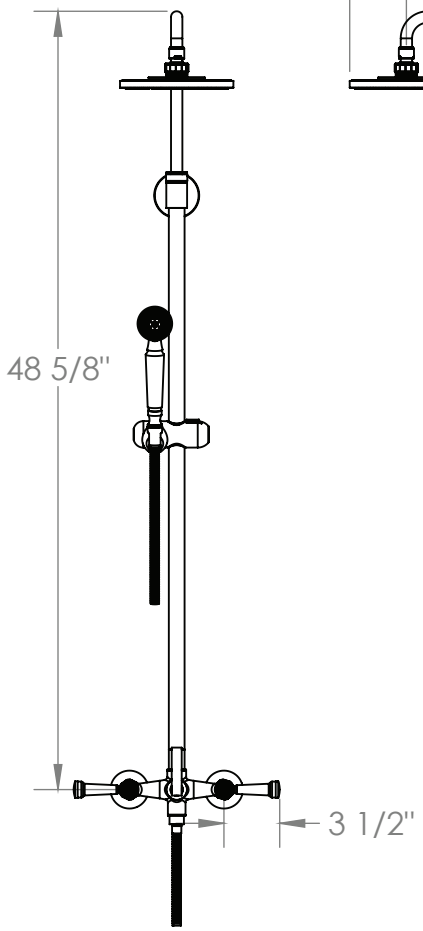

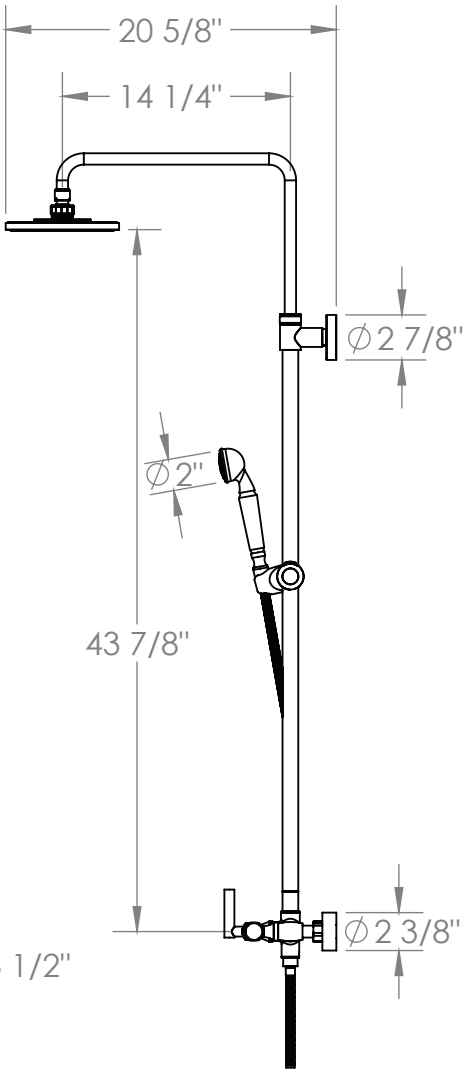

Meets the applicable requirements of ASME A112.18.1-2005/CSA B125.1-05, entitled "Plumbing Supply Fittings"